Stealth Microwave
INCORPORATED

# Model SM6471-43

**6400-7100 MHz**
**20 Watt Ultra-Linear Power Amplifier**
**FOR COFDM APPLICATIONS**

The **SM6471-43** is a 6.4 to 7.1 GHz solid state GaAs FET amplifier designed for various commercial and military applications. The amplifier provides 55 dB of linear gain with a P1dB of +43 dBm. It is available in modular form (standard), as a lab unit or in 19” rack mountable form.

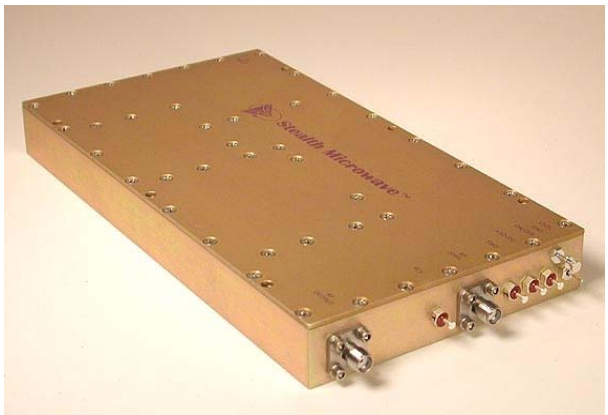


## Features

- Integrated Linearizer
- Single Power Supply
- Over Voltage Protection
- Thermal Protection with Auto Reset
- Temperature Compensation

## Options

- Forward/Reverse Power Detection
- RF Sampling Port
- Pulse Control with switching speeds up to 100 kHz
- Logic On/Off Control
- Integral Heatsink

## Configurations

- Module
- Laboratory Unit
- 19” Rack Mount

| Parameter | Specification |
|---|---|
| Frequency Range | 6.425 – 7.125 GHz |
| Pout (P1dB) | +43 dBm |
| Output Third Order Intercept Point (OIP3) | +54 dBm |
| Linear Gain | 57 dB ± 1 dB |
| Gain Flatness (over full band) | ± .75 dB |
| Gain Change (over temperature) | ± .5 dB |
| Input/Output Return Loss | -16 dB / -16dB |
| DC Input Voltage | +12 Volts |
| DC Input Current | 9.2 Amperes (operational) |
| Mechanical Dimensions | 7.50 x 3.97 x .79 inches H=3.3 inches with heatsink |
| RF Connectors | SMA Female |
| Operating Temperature | 0ºC to +55ºC |
| Operating Humidity | 95% Non-condensing |
| Operating Altitude | Up to 10,000 feet above Sea Level |

1007 Whitehead Road Ext., Trenton, NJ 08638
Tel: (609) 538-8586 ♦ Fax: (609) 538-8587
Email: sales@stealthmicrowave.com ♦ Web site: www.stealthmicrowave.com

# Model SM6471-43

**6400-7100 MHz**
**20 Watt Ultra-Linear Power Amplifier**
**FOR COFDM APPLICATIONS**

## DIMENSIONS IN INCHES

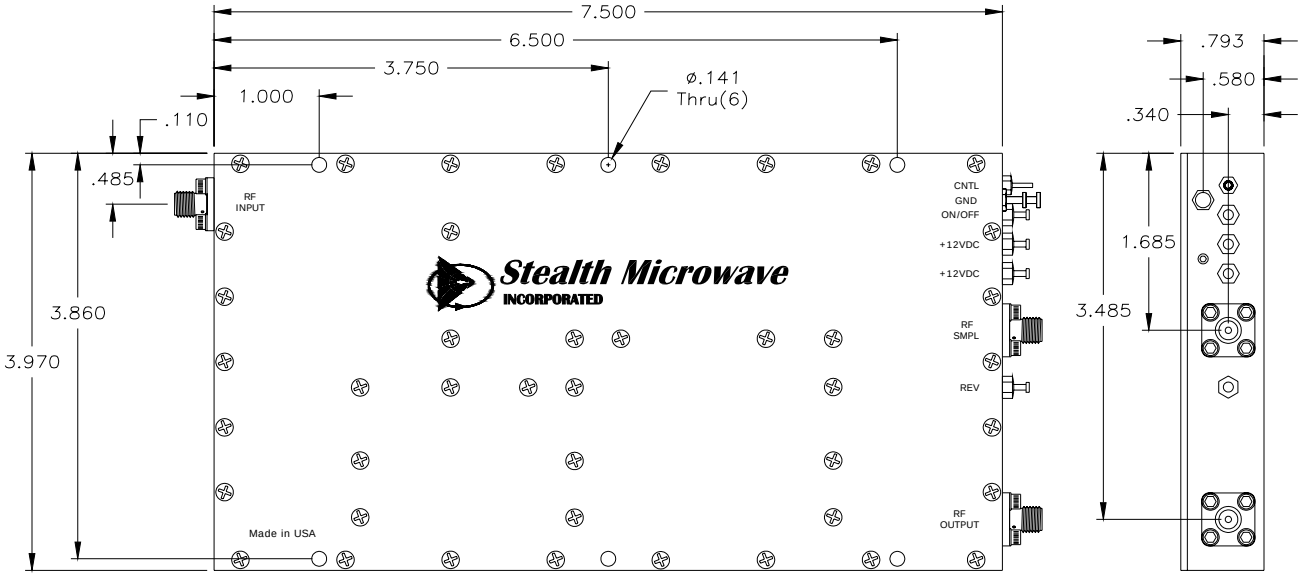


## HEATSINK OPTION

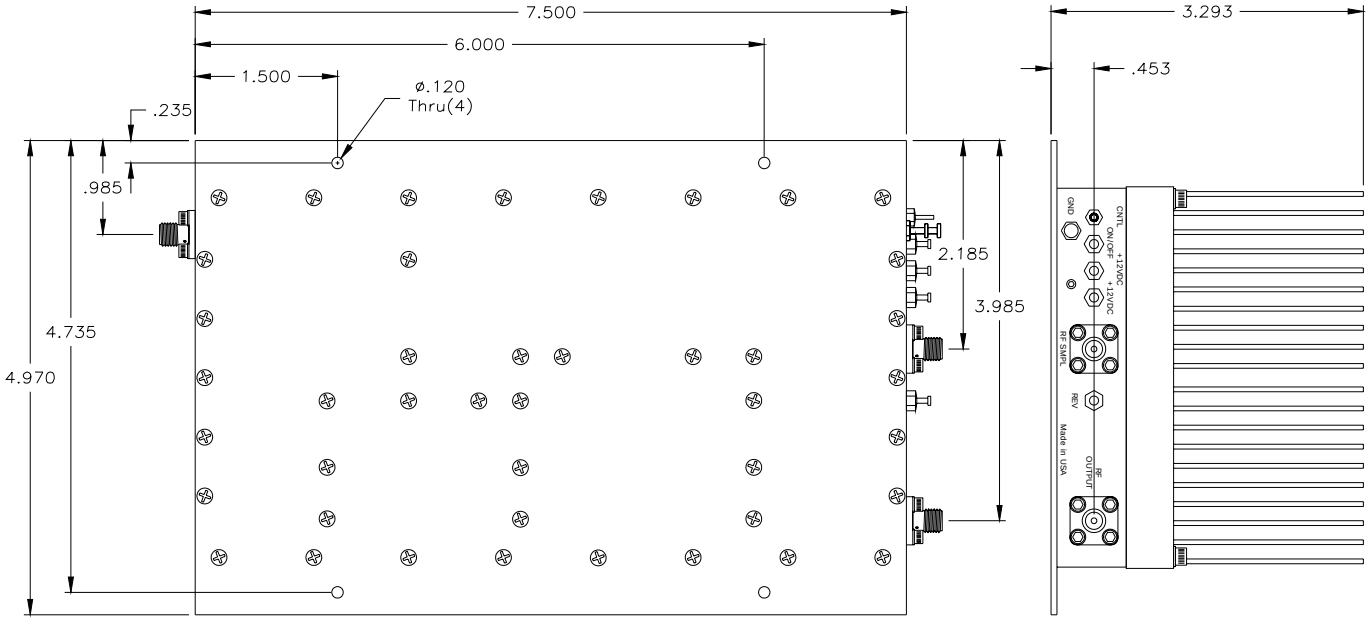



1007 Whitehead Road Ext., Trenton, NJ 08638
Tel: (609) 538-8586 ♦ Fax: (609) 538-8587
Email: sales@stealthmicrowave.com ♦ Web site: www.stealthmicrowave.com

# Model SM6471-43

**6400-7100 MHz**
**20 Watt Ultra-Linear Power Amplifier**
**FOR COFDM APPLICATIONS**

## HEATSINK & FAN OPTION

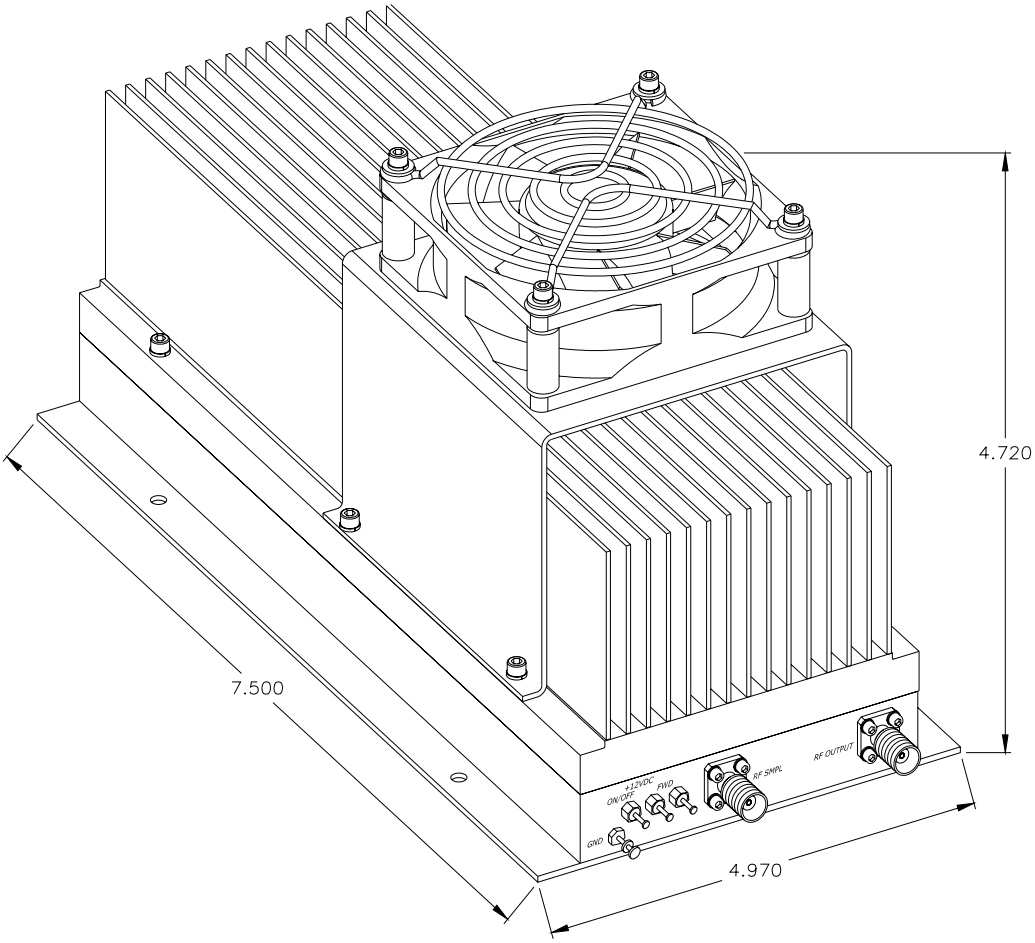


| Pin | Description | Values |
|---|---|---|
| RF INPUT | Input Connector ( SMA Female ) | - 13 dBm (max.) |
| RF OUTPUT | Output Connector (SMA Female) | + 42.5 dBm @ P1dB |
| RF SAMPLE | RF Sample Port (SMA Female ) | 30 dBr |
| GND | Ground Turret | --- |
| FWD | Forward Power Detector | + 39 dBm Output Power ≈ + 5.0 Volts |
| REV | Reverse Power Detector | ∞ VSWR @ + 39 dBm ≈ + 4.0 Volts |
| +12VDC | DC Input Voltage | + 12 Volts @ 9.2 Amperes. (operational) |
| ON/OFF | TTL Logic On/Off | 0 Volts = Off, + 5 Volts = On |
| CNTL | TTL Pulse Control | Rates up to 100 kHz |

*Specifications subject to change without notice.*


1007 Whitehead Road Ext., Trenton, NJ 08638
Tel: (609) 538-8586 ♦ Fax: (609) 538-8587
Email: sales@stealthmicrowave.com ♦ Web site: www.stealthmicrowave.com