Stealth Microwave
INCORPORATED

Model SM1025-36DMQ2

1000-2500 MHz
4 Watt Linear Power Amplifier

The **SM1025-36DMQ2** is a GaAs FET amplifier designed for various military and commercial applications. This small size, high efficiency module is well suited for applications such as COFDM video and C2 links in UAVs and in portable, battery-powered transmitters. It comes packaged in a weatherproof housing that provides integral heat-sinking for a wide ambient operating temperature range.

Features:

- Single DC Supply of +12V
- Over/Reverse Voltage Protection
- VSWR Protection
- Thermal Protection with Auto Reset
- Weatherproof Sealed Housing

Options

- TTL on/off

Parameter	Specification		
Frequency Range	1000 - 2500 MHz		
Pout (P1dB, dBm)	+ 35.5 min.	+ 35.8 typ.	+ 36.8 max.
Linear Gain	10 dB ±1dB		
OIP3	50 dBm typ.		
Gain Flatness over Full Band	± .75 dB		
Input/Output Return Loss	-10/-10		
DC Supply	+ 12 Volts @ 600-800 mA Operating @ 30-33 dBm COFDM		
RF Connectors	SMA / TNC		
Operating Temperature	-10ºC to 60ºC (Ambient)		
Mechanical Dimensions	5.16 x 2.83 x 1.38 inches		
Weight	12 ounces		

1007 Whitehead Road Ext., Trenton, NJ 08638
Tel: (609) 538-8586 ♦ Fax: (609) 538-8587
Email: sales@stealthmicrowave.com ♦ Web site: www.stealthmicrowave.com

DIMENSIONS IN INCHES

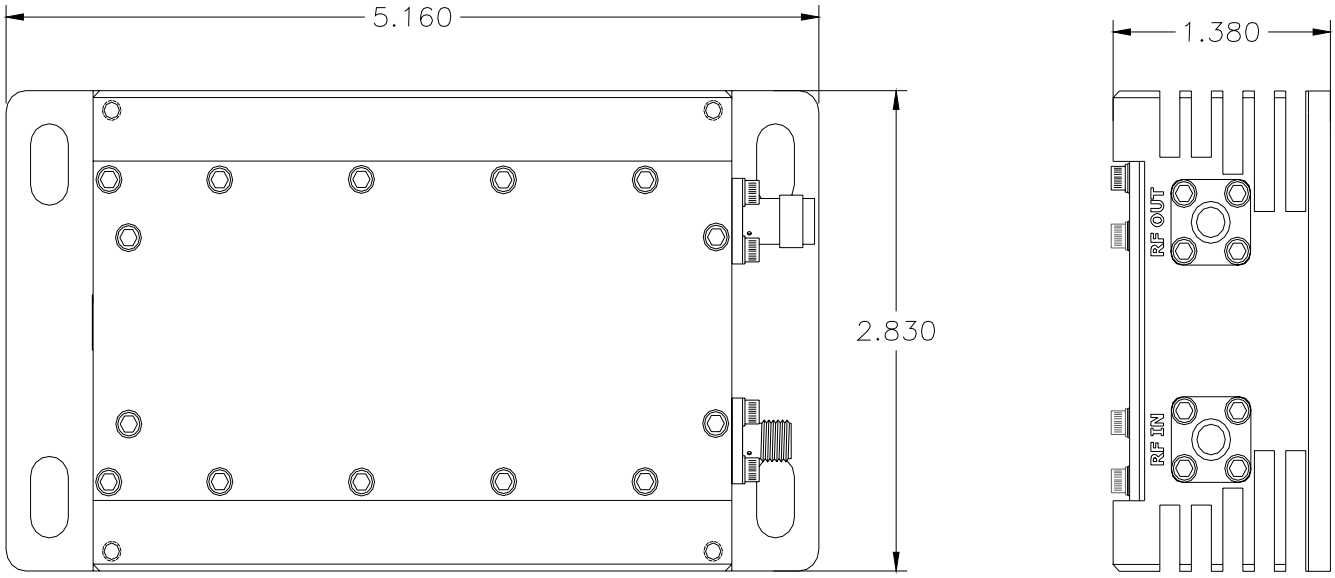

Pin	Description	Values
RF Input	Input Connector (SMA)	+27dBm max
RF Output	Output Connector (TNC)	+ 36 dBm @ P1dB
POWER	3 Pin OB Lemo Connector	+12V / GND / Enable Pin (+5V = ON)

1007 Whitehead Road Ext., Trenton, NJ 08638
Tel: (609) 538-8586 ♦ Fax: (609) 538-8587
Email: sales@stealthmicrowave.com ♦ Web site: www.stealthmicrowave.com

Model SM1025-36DMQ2

1000-2500 MHz

4 Watt Linear Power Amplifier

64QAM COFDM OUTPUT – 32.2 dBm

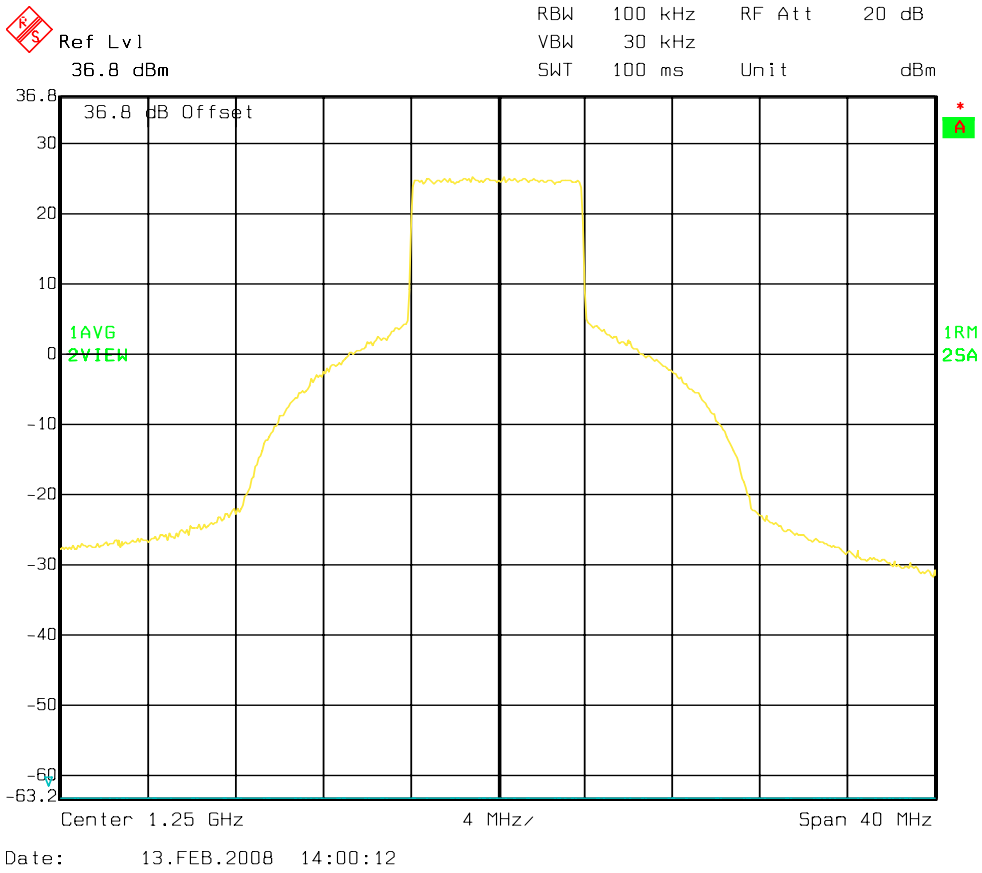

1007 Whitehead Road Ext., Trenton, NJ 08638

Tel: (609) 538-8586 ♦ Fax: (609) 538-8587

Email: sales@stealthmicrowave.com ♦ Web site: www.stealthmicrowave.com

Model SM1025-36DMQ2

1000-2500 MHz

4 Watt Linear Power Amplifier

64QAM COFDM OUTPUT – 30.0 dBm

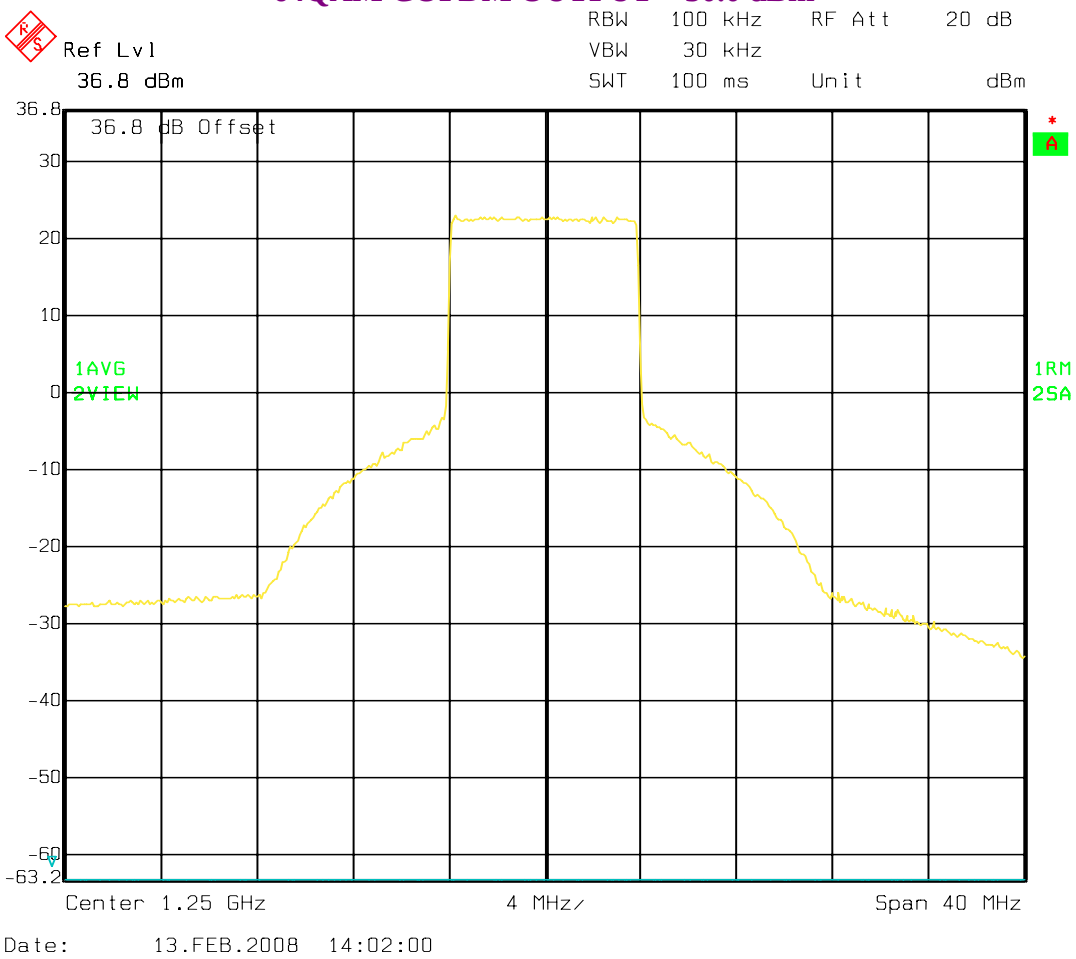

Specifications subject to change without notice.

1007 Whitehead Road Ext., Trenton, NJ 08638
Tel: (609) 538-8586 ♦ Fax: (609) 538-8587
Email: sales@stealthmicrowave.com ♦ Web site: www.stealthmicrowave.com